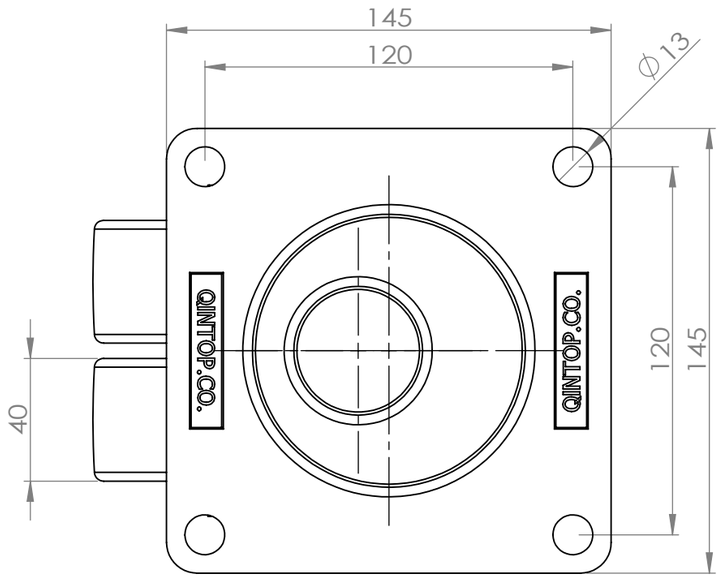

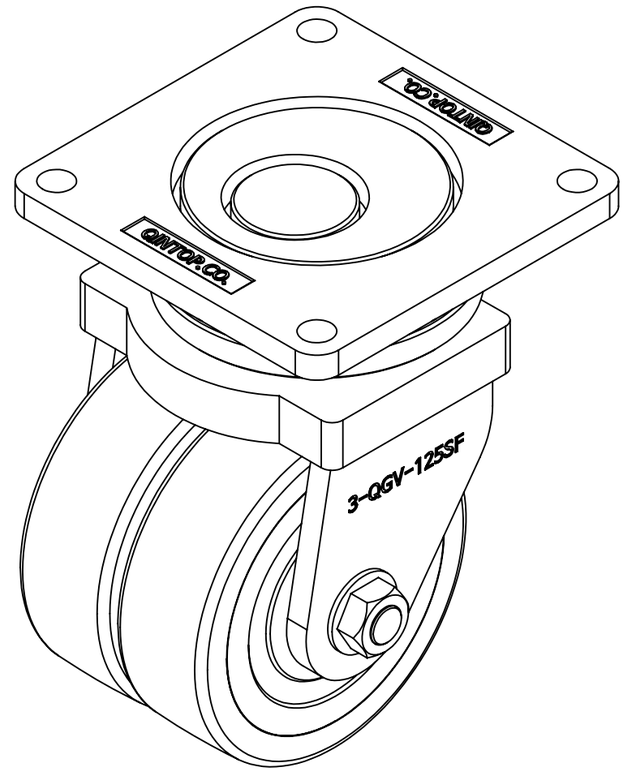

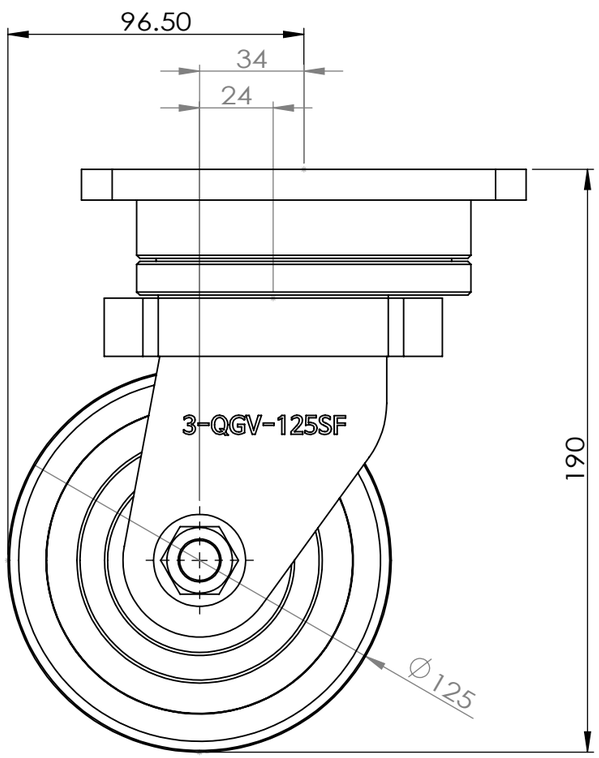

Drawn	Checked &Approved	Date	Product
Heon mun, Lee	In hwan, Lee	Oct 31st, 2023	AGV Caster

Q-INTOP

Material

Top plate	SM45C
Ball	STB2
Frame	SM45C
Pin	SM45C
Wheel	MC NYLON
	URETHANE
Bearing	6204

Title

3-QGV-125SF

Draw NO.

QIN-3QGV-0001

Scale 1:1

Sheet 1 of 1