ACHMT-100SF

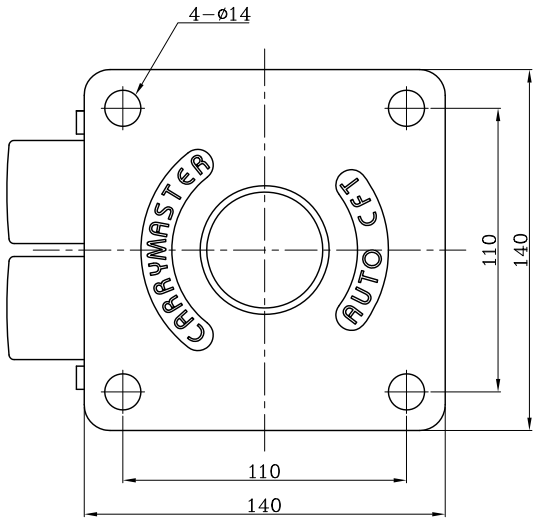
4-ø14
CRAYMASTER
AUTO CFT
110
140
110
140

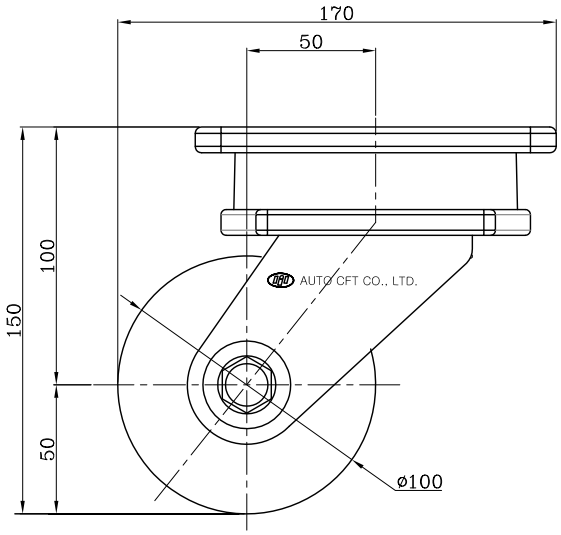
170
50
100
150
50
AUTO CFT CO., LTD.
ø100

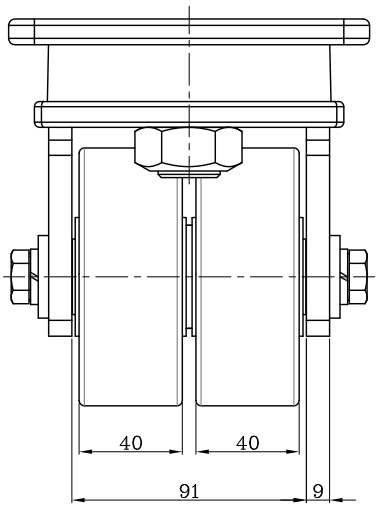
40
40
91
9