ACHMT-75SF

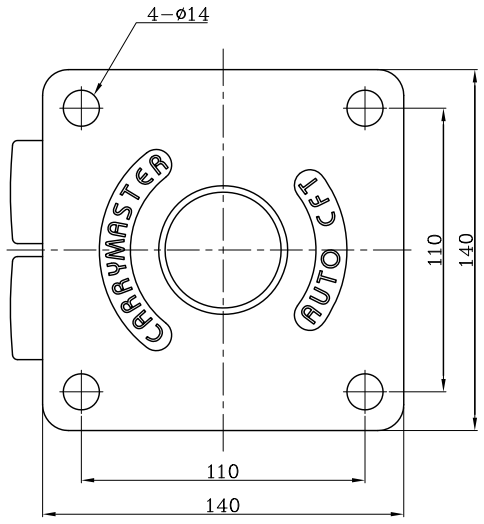
4-ø14
CARRYMASTER
AUTO CFT
110
140
110
140

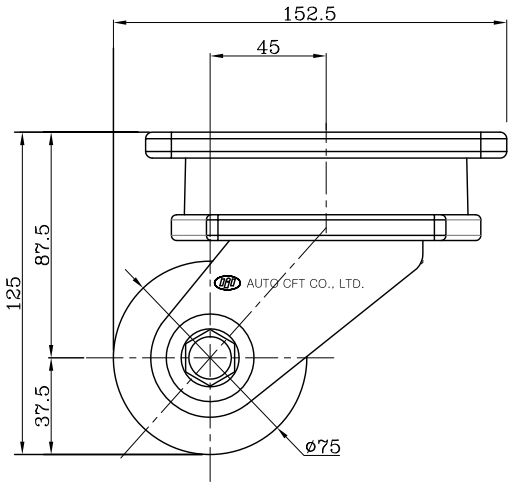
152.5
45
125
87.5
37.5
AUTO CFT CO., LTD.
ø75

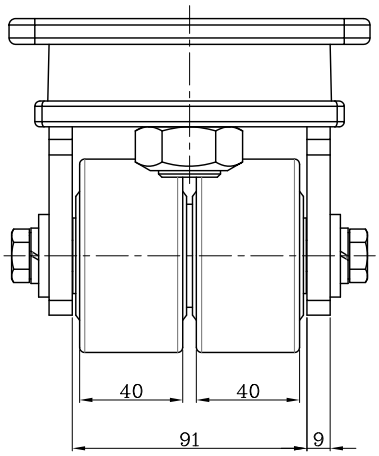
40
40
91
9