NO.	DESCRIPTIONS	MAT'L	Q'TY	WEIGHT KG. UNIT	WEIGHT KG. TOTAL	REMARKS.

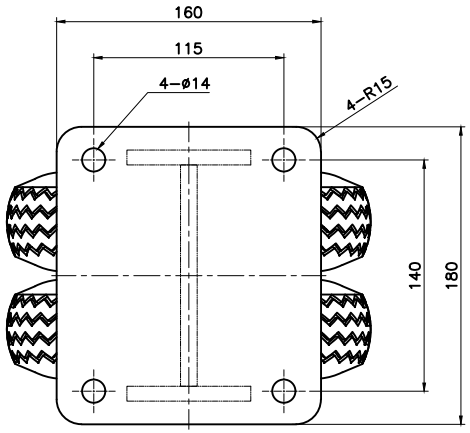

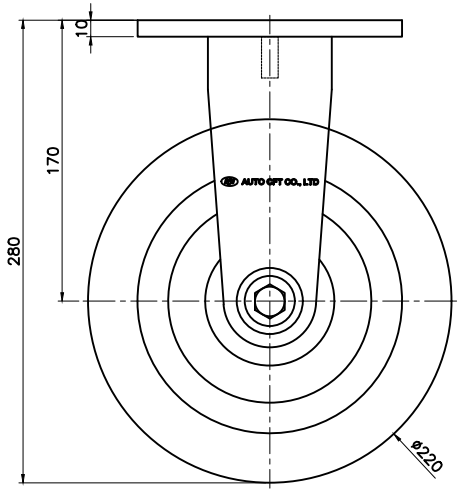

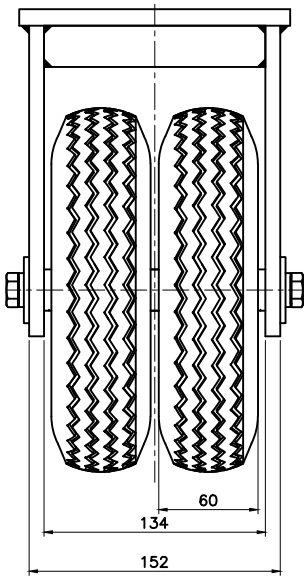

주서
1. 하중 : 200kg/1ea, 600kg/4ea

REV. NO.	DATE	MODIFICATIONS	DRAWN BY	DESIGN BY	CHECKED BY	APPROVED BY
0	2021. 10.22	FIRST ISSUE		박일경	김광영	최규일

OWNER

AUTO CFT CO., LTD.
CASTER FOOT TECHNOLOGY

PROJECT: CARRYMASTER

CLASS: 1/1 SCALE

TITLE.: ACHRFT-220RF

ASSEMBLY DRAWING

A4 SIZE | mm(inch) DIM. | THIRD ANGLE PROJECTION | REF. DRAWING: 0

AUTO CFT DRAWING NO. | REV. NO.: 0 | SHEET: /