REV. NO.	DATE	MODIFICATIONS	DRAWN BY	DESIGN BY	CHECKED BY	APPROVED BY
1	2022. 05.12	FIRST ISSUE		박일경	김광영	최규일

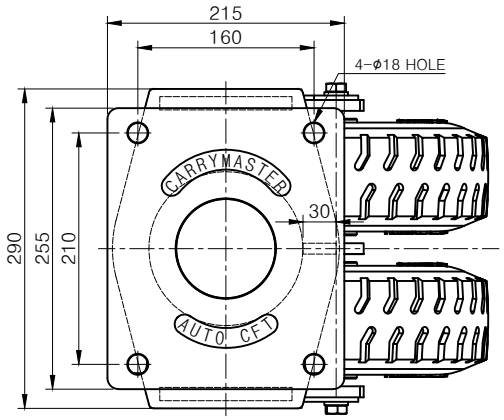

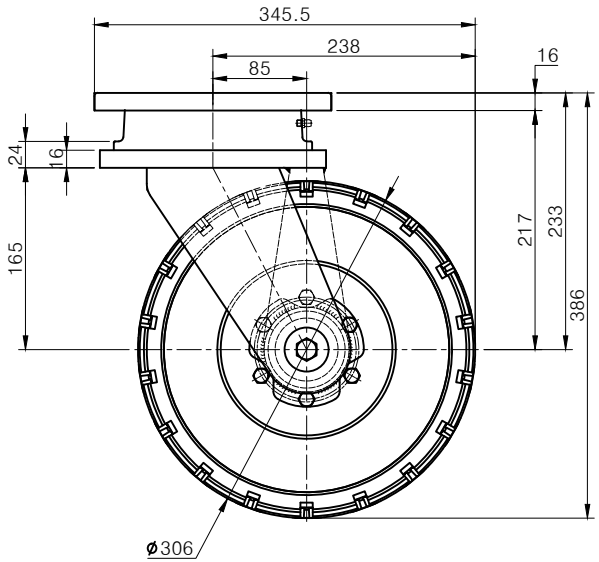

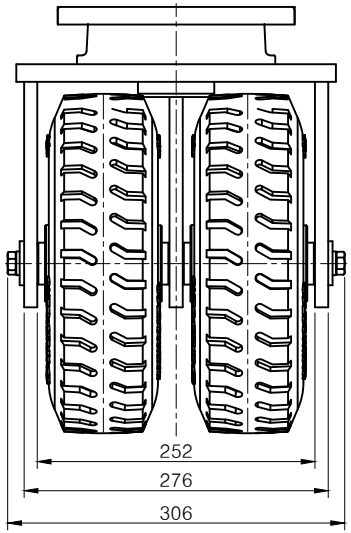

주서
1. 하중 1000kg/1ea, 3000kg/4ea

NO.	DESCRIPTIONS	MAT'L	Q'TY	UNIT WEIGHT KG.	TOTAL WEIGHT KG.	REMARKS.

OWNER: STANDARD

AUTO CFT CO., LTD.
CASTER FOOT TECHNOLOGY

PROJECT: CARRYMATER

CLASS: 1/1 SCALE

TITLE: ACHRT-300SF ASSEMBLY

A4 SIZE | mm(inch) DIM. | THIRD ANGLE PROJECTION

REF. DRAWING: 0

AUTO CFT DRAWING NO.

REV. NO.: 1

SHEET: /