REV. NO.	DATE	MODIFICATIONS	DRAWN BY	DESIGN BY	CHECKED BY	APPROVED BY
0	2022. 05.23	FIRST ISSUE		박일경	김광영	최규일

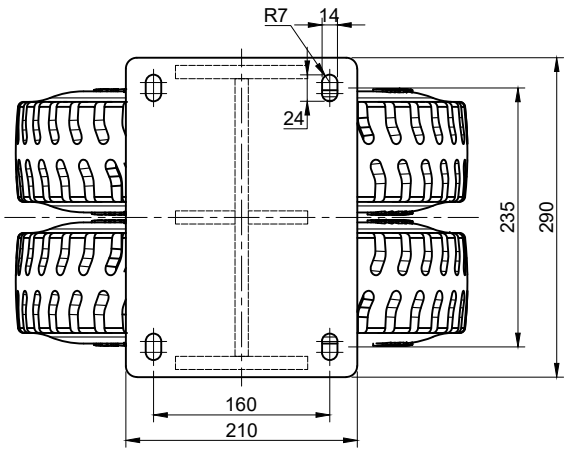

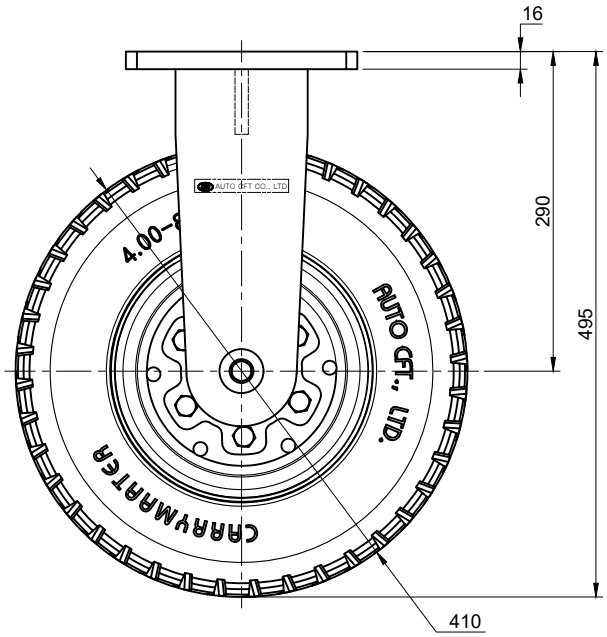

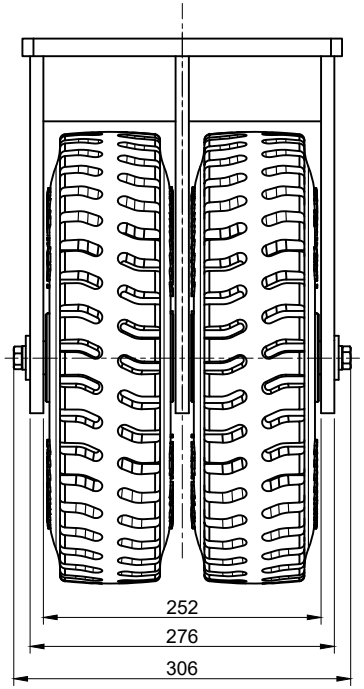

주서
1. 하중 1800kg/1ea, 5400kg/4ea

NO.	DESCRIPTIONS	MAT'L	Q'TY	UNIT WEIGHT KG.	TOTAL WEIGHT KG.	REMARKS.

OWNER	STANDARD
	AUTO CFT CO., LTD. CASTER FOOT TECHNOLOGY
PROJECT	CARRYMATER
CLASS	TITLE. ACHRT-400RF
1/1 SCALE	ASSEMBLY
A4 SIZE / mm(inch) DIM.	THIRD ANGLE PROJECTION
REF. DRAWING	0
AUTO CFT DRAWING NO.	REV. NO. 1 / SHEET /