NO.	DESCRIPTIONS	MAT'L	Q'TY	UNIT WEIGHT KG.	TOTAL WEIGHT KG.	REMARKS.

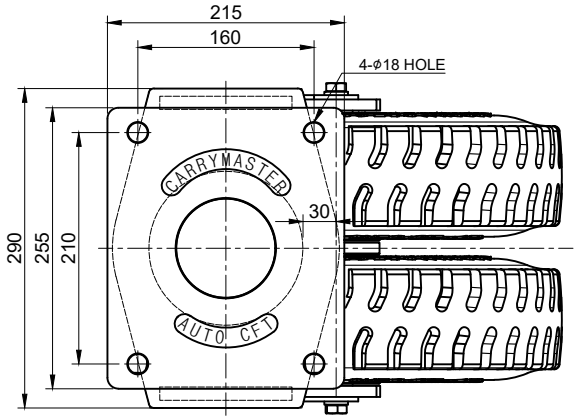

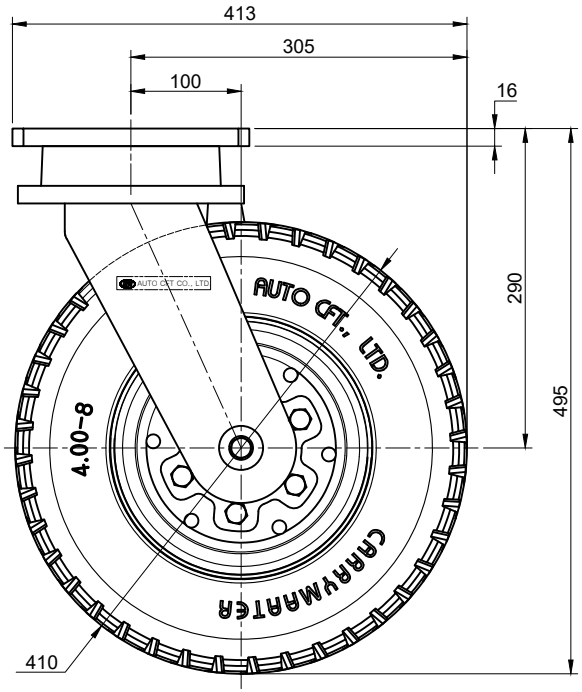

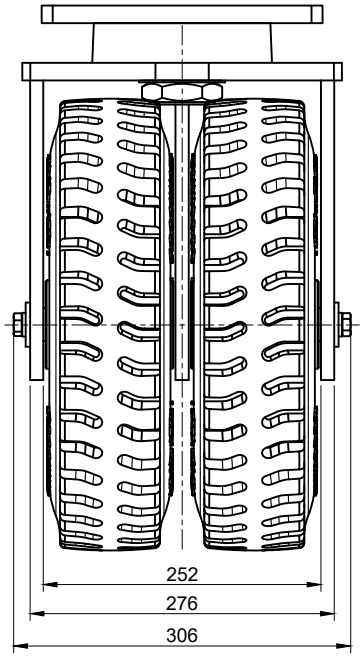

주서
1. 하중 1800kg/1ea, 5400kg/4ea

REV. NO.	DATE	MODIFICATIONS	DRAWN BY	DESIGN BY	CHECKED BY	APPROVED BY
0	2026. 03.24	FIRST ISSUE		박일경	김광영	최규일

OWNER: STANDARD

AUTO CFT CO., LTD.
CASTER FOOT TECHNOLOGY

PROJECT: CARRYMATER

CLASS: TITLE. ACHRT-400SF

1/1 SCALE: ASSEMBLY

A4 SIZE | mm(inch) DIM. | THIRD ANGLE PROJECTION | REF. DRAWING 0

AUTO CFT DRAWING NO. | REV. NO. 1 | SHEET /