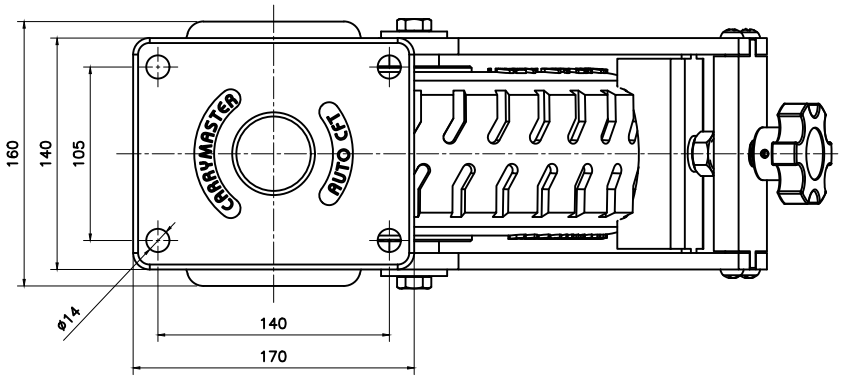

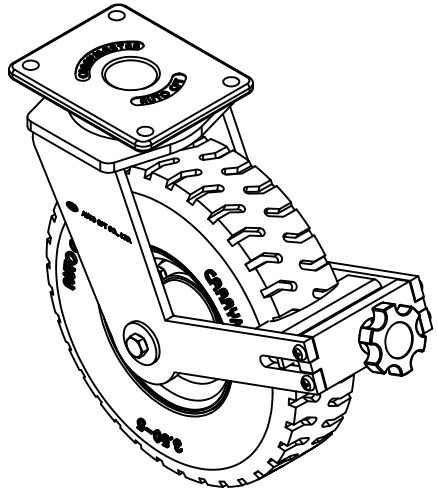

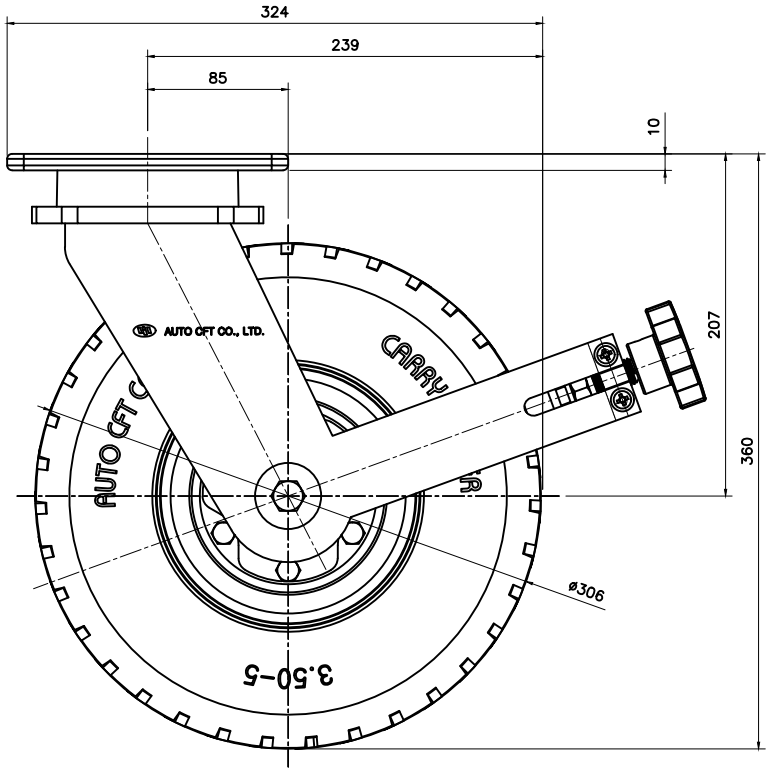

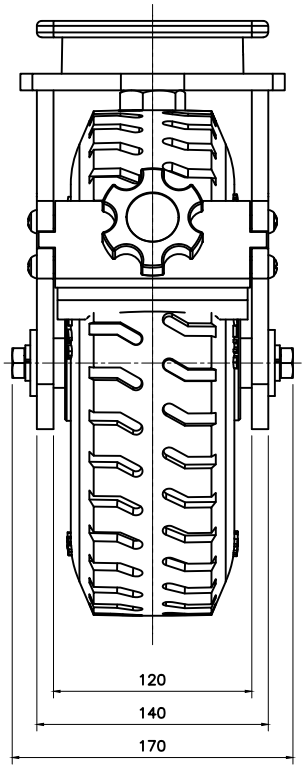

OWNER	STANDARD		
	AUTO CFT CO., LTD. CASTER FOOT TECHNOLOGY		
PROJECT	CARRYMATER		
CLASS	TITLE. ACHR-300SFB		
1/1 SCALE	ASSEMBLY		
A4 SIZE	mm(inch) DIM.	THIRD ANGLE PROJECTION	REF. DRAWING 0
AUTO CFT DRAWING NO.			REV. NO. 0 / SHEET