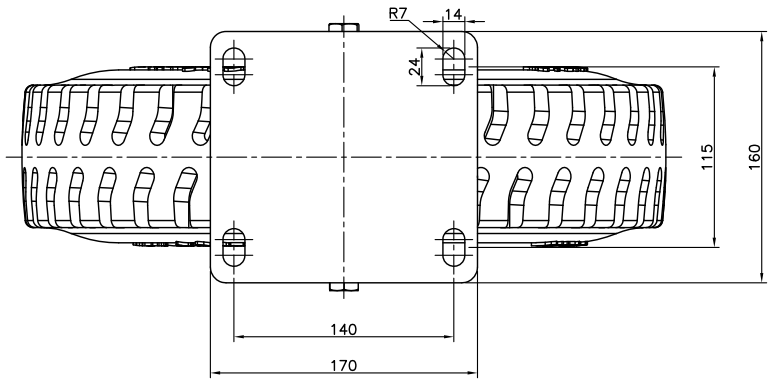

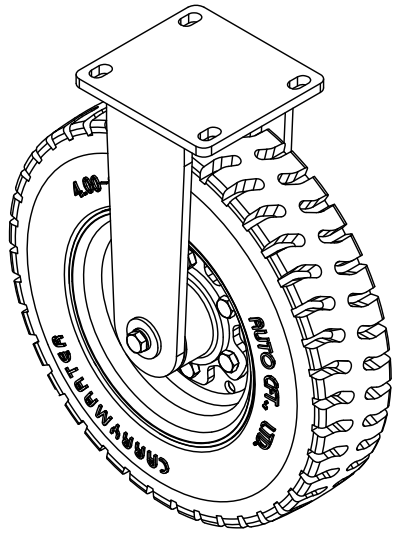

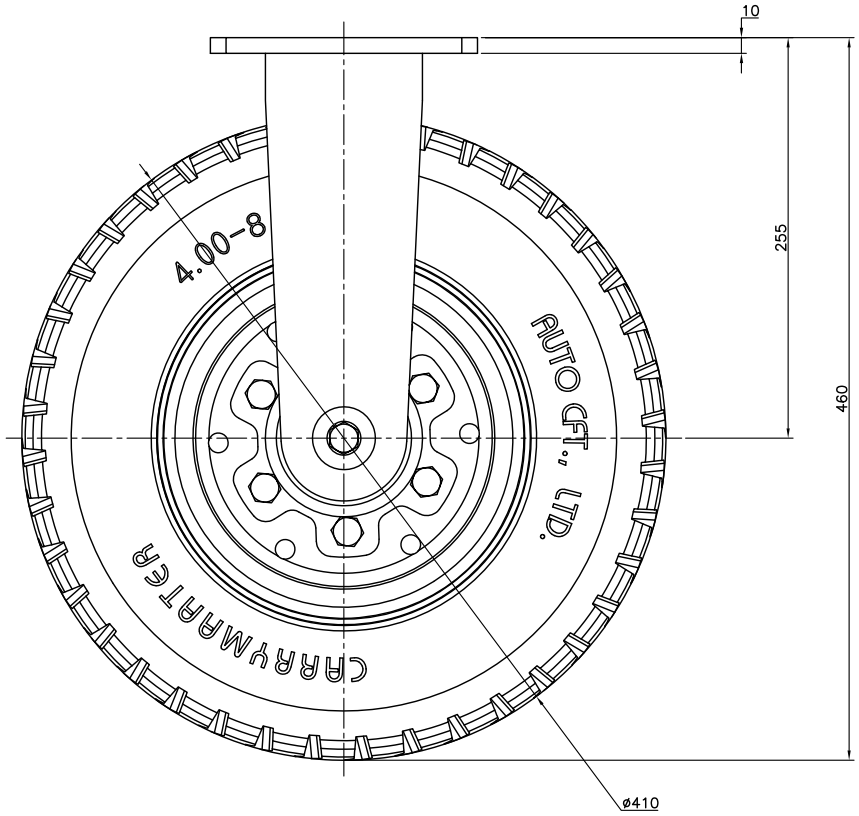

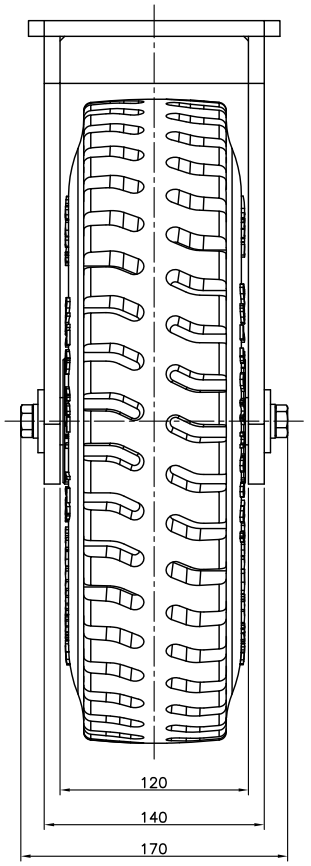

OWNER	STANDARD		
AUTO CFT CO., LTD. CASTER FOOT TECHNOLOGY			
PROJECT	CARRYMATER		
CLASS	TITLE. ACHR-400RF		
1/1 SCALE	ASSEMBLY		
A4 SIZE	mm(inch) DIM.	THIRD ANGLE PROJECTION	REF. DRAWING 0
AUTO CFT DRAWING NO.			REV. NO. 0 / SHEET /