NO.		DESCRIPTIONS	MAT'L	Q'TY	WEIGHT KG. UNIT	WEIGHT KG. TOTAL	REMARKS.
1		ACMC-127SSB	-	1			-

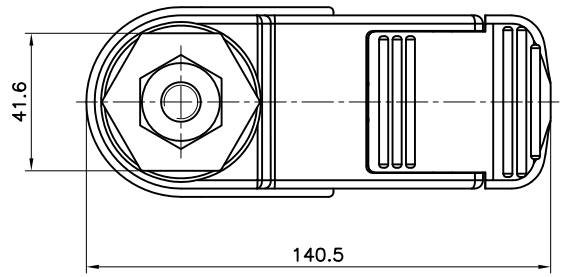

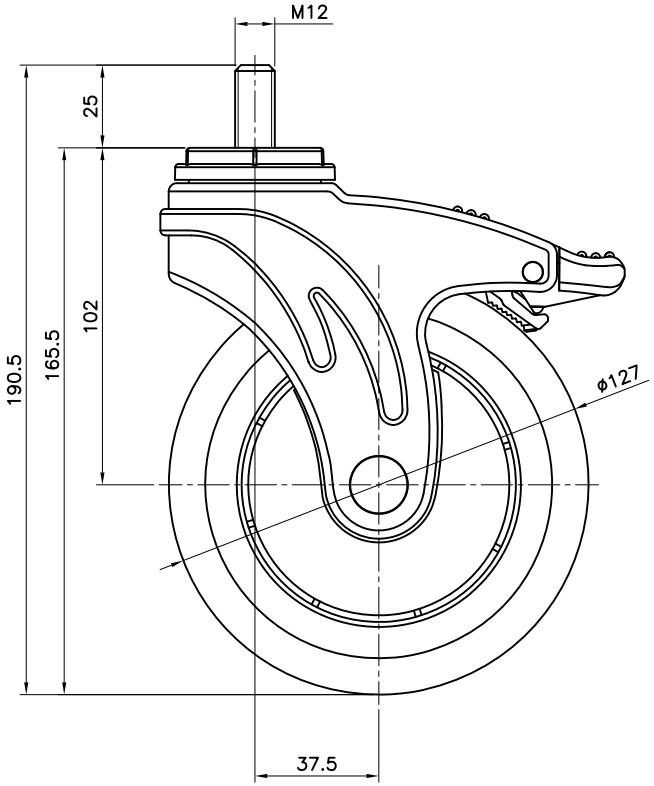

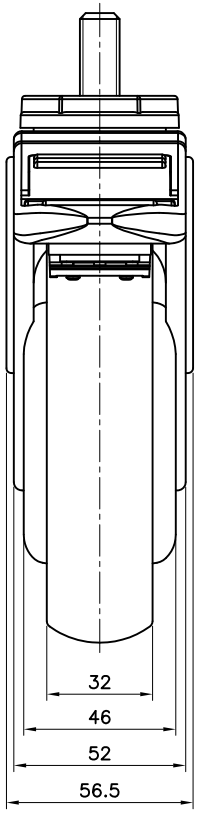

NOTE

* LOAD CAPACITY : 135kg/1ea , 405kg/4ea
* WHEEL : TPR with PP core (φ127 x W32)

REV. NO.	DATE	MODIFICATIONS	DRAWN BY	DESIGN BY	CHECKED BY	APPROVED BY
0	2019. 07.03	FIRST ISSUE	윤성	박일경	김광영	최규일

OWNER

AUTO CFT CO., LTD.
CASTER FOOT TECHNOLOGY

PROJECT: ACMC SERIES

CLASS: 1/1 SCALE

TITLE.: ACMC-127SSB ASS'Y

A4 SIZE | mm(inch) DIM. | THIRD ANGLE PROJECTION | REF. DRAWING

AUTO CFT DRAWING NO.: - | REV. NO.: 0 | SHEET: /