ACMU – 75SF

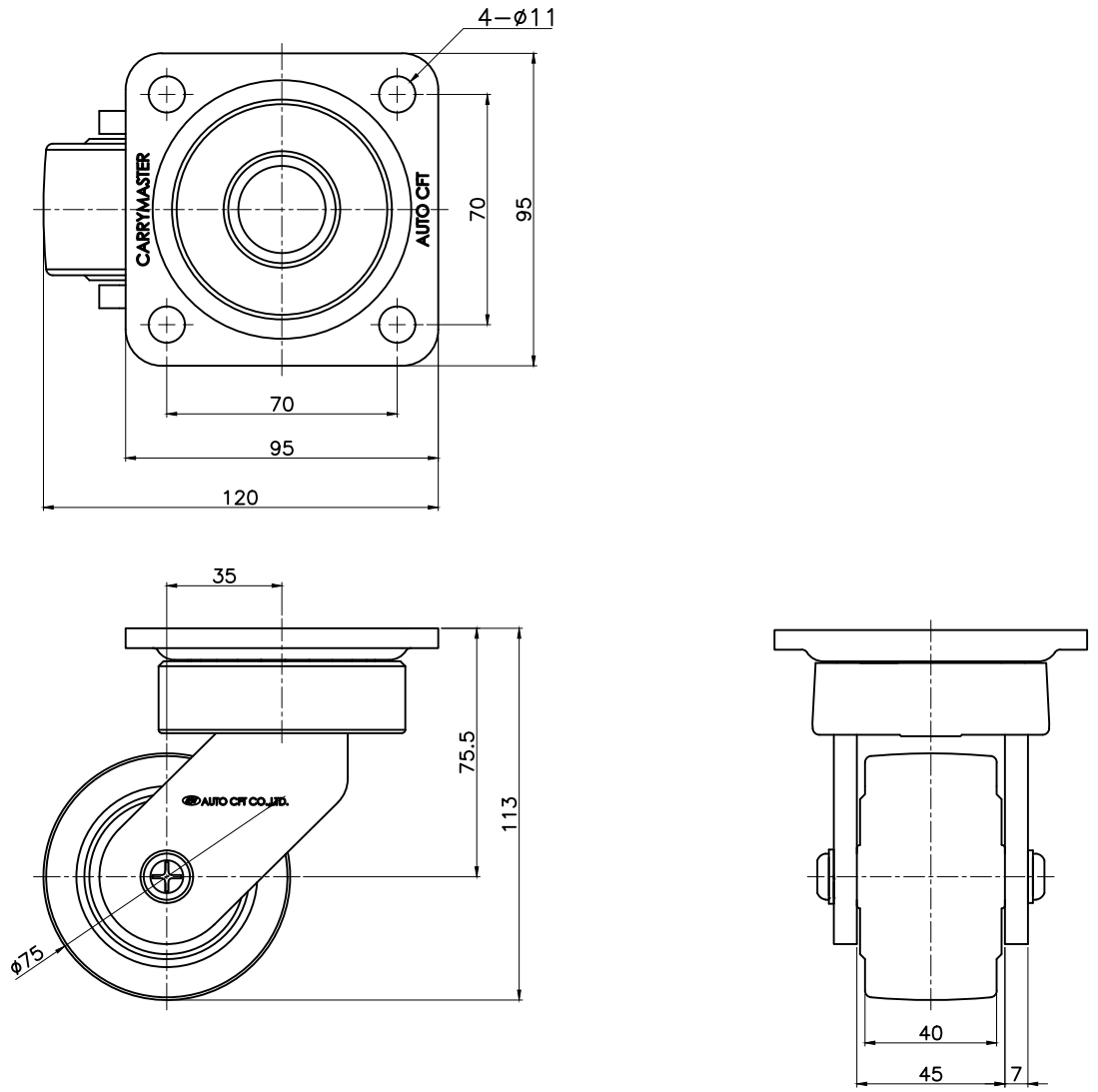
4–ø11
CARRYMASTER
AUTO CFT
70
95
70
95
120
35
75.5
113
AUTO CFT CO.,LTD.
ø75
40
45
7