NO.	DESCRIPTIONS	MAT'L	Q'TY	WEIGHT KG. UNIT	WEIGHT KG. TOTAL	REMARKS.

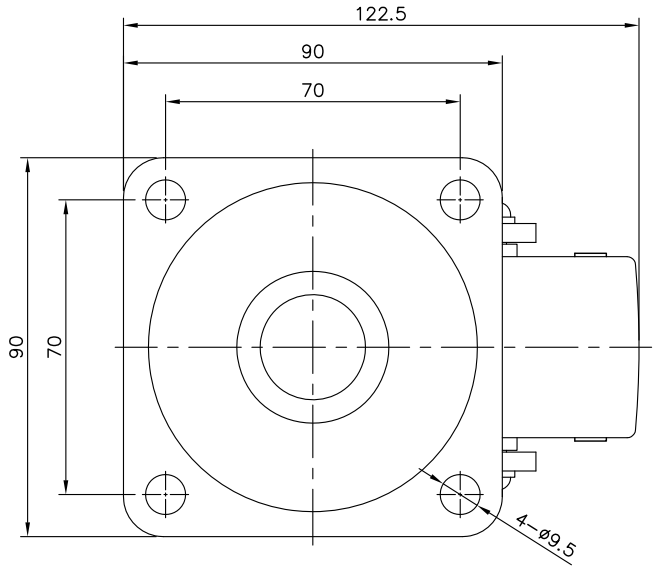

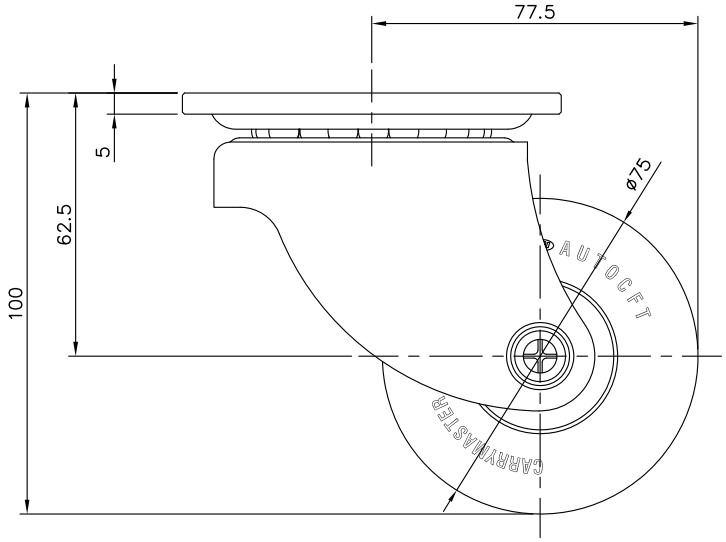

도면에 지정하지 않은 일반공차			
치수 \ 급수	A 급	B 급	C 급
6 이하	± 0.05	± 0.1	± 0.2
6 – 30	± 0.1	± 0.2	± 0.5
30 – 120	± 0.15	± 0.3	± 0.8
120 – 400	± 0.2	± 0.5	± 1.2
400 – 1000	± 0.3	± 0.8	± 2
1000 – 2000	± 0.5	± 1.2	± 3

REV. NO.	DATE	MODIFICATIONS	DRAWN BY	DESIGN BY	CHECKED BY	APPROVED BY
0	2009. 11.30	FIRST ISSUE	이영호		정해균	최규일

OWNER

AUTO CFT CO., LTD.
CASTER FOOT TECHNOLOGY

PROJECT

CLASS	TITLE.
1/1 SCALE	ACPB-1000F ASSEMBLY DRAWING

A4 SIZE	mm(inch) DIM.	THIRD ANGLE PROJECTION	REF. DRAWING 0
AUTO CFT DRAWING NO.	–	REV. NO. 0	SHEET /