NO.		DESCRIPTIONS	MAT'L	Q'TY	WEIGHT KG. UNIT	WEIGHT KG. TOTAL	REMARKS.
1		AVEMC-76SF	-	1			-
	1	TOP PLATE	SPC	1			-
	2	FRAME	PA6	1			-
	3	WHEEL CORE	PP	1			-
	4	WHEEL	TPR	1			-
	5	AVEL ASSEMBLY	-	1			-

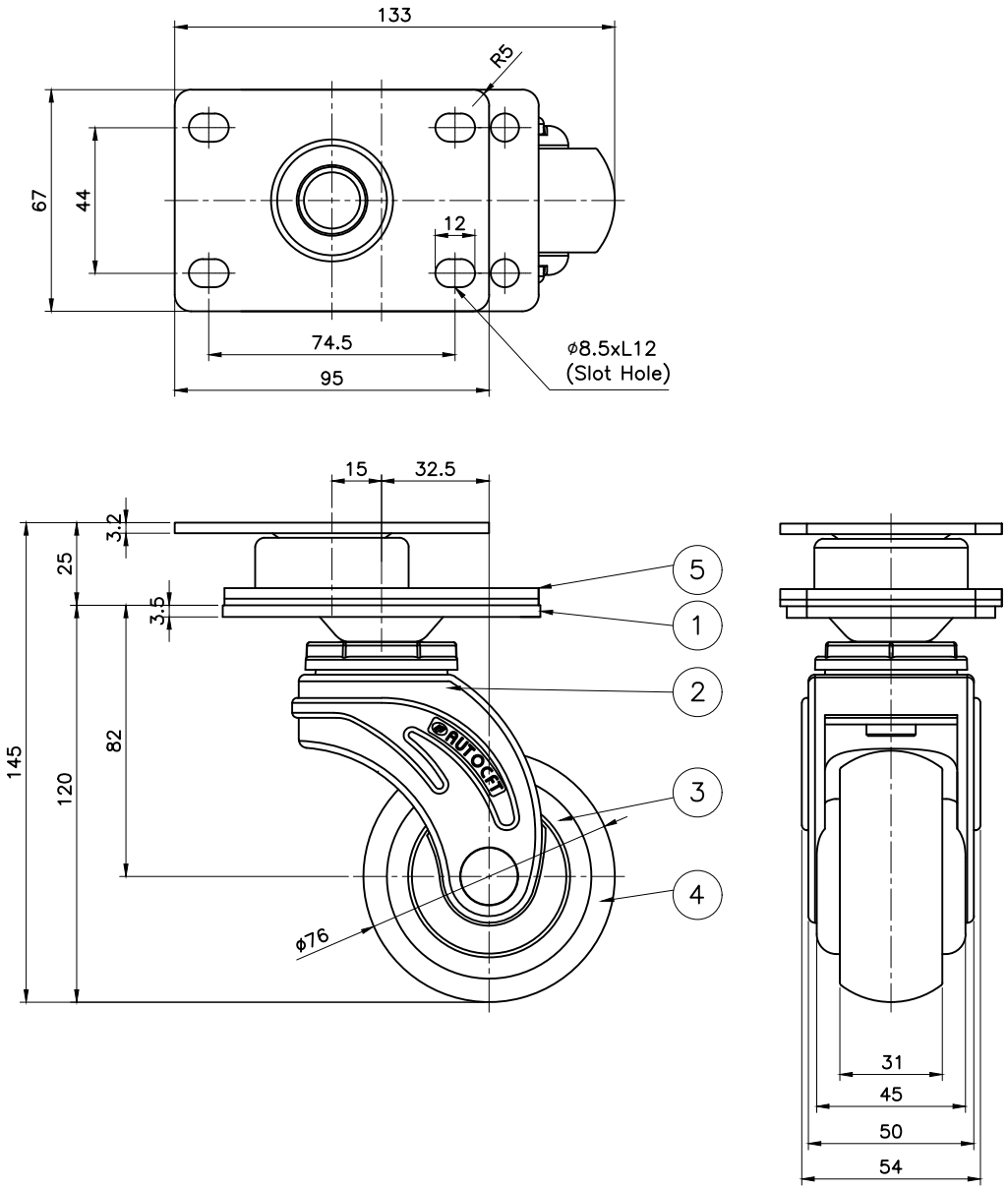

NOTE

* LOAD CAPACITY : 90kg/1ea , 270kg/4ea
* WHEEL : TPR with PP core (ϕ76 x W31)

REV. NO.	DATE	MODIFICATIONS	DRAWN BY	DESIGN BY	CHECKED BY	APPROVED BY
0	2021 05.27	FIRST ISSUE		박일경	김광영	최규일

OWNER

AUTO CFT CO., LTD.
CASTER FOOT TECHNOLOGY

PROJECT: AVEMC SERIES

TITLE: AVEMC-76SF
ASSEMBLY DRAWING

CLASS: 1/1
SCALE: A4
SIZE: mm(inch)
DIM.
THIRD ANGLE PROJECTION
REF. DRAWING

AUTO CFT DRAWING NO.: -
REV. NO.: 0
SHEET: /